REV	DATE	CONTENT
V1	20201117	First release

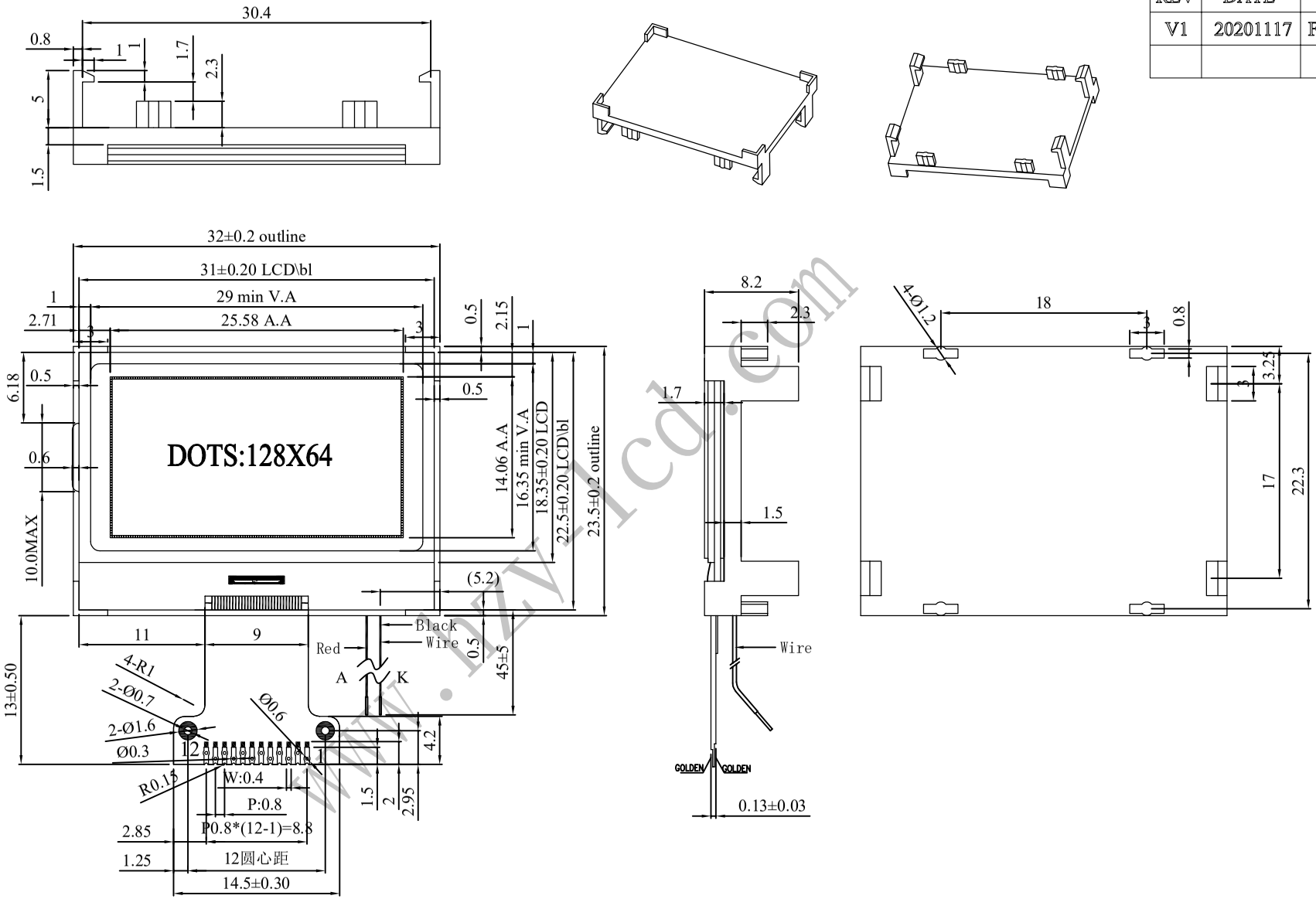

PIN NO.	SYMBOL
1	CSB
2	RST
3	A0
4	SCL
5	SDA
6	VDD
7	VSS
8	V0
9	XV0
10	VG
11	NC
12	NC

1	Lcd Type	FSTN
2	Viewing Direction	12 O'clock
3	Drive Method	1/65 DUTY,1/9BIAS
4	Polarizer Mode	Transmissive/Positive
5	Operating Voltage	3.0~3.3V
6	Operating Temperature	-20°C ~70°C
7	Storage Temperature	-30°C ~80°C
8	Controller	ST7567 or compitable
9	Backlinght	3 PCS LED ,WHITE VF=3.0±0.2V,IF=45mA

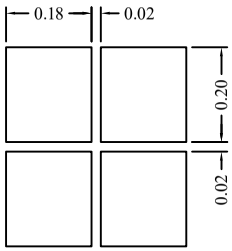

The non-specified tolerance of dimension is ± 0.3mm.

SCALE: 1/1	UNIT: mm	HZY DISPLAY CO.	
REV: V1	PAGE: 1/1		
APPROVE		MODEL HO12864H-WFL012 -00	
CHECK		TITLE LCM DRAWING	
DRAW		DWG NO.	

www.hzy-lcd.com